Parts List			
Item	Qty	Part Number	Material
1	1	Index and ring finger part 2 v4	----
2	1	Index and ring finger part 3 v2	----
3	1	Index and ring finger part 1(incorrect) v6	Steel

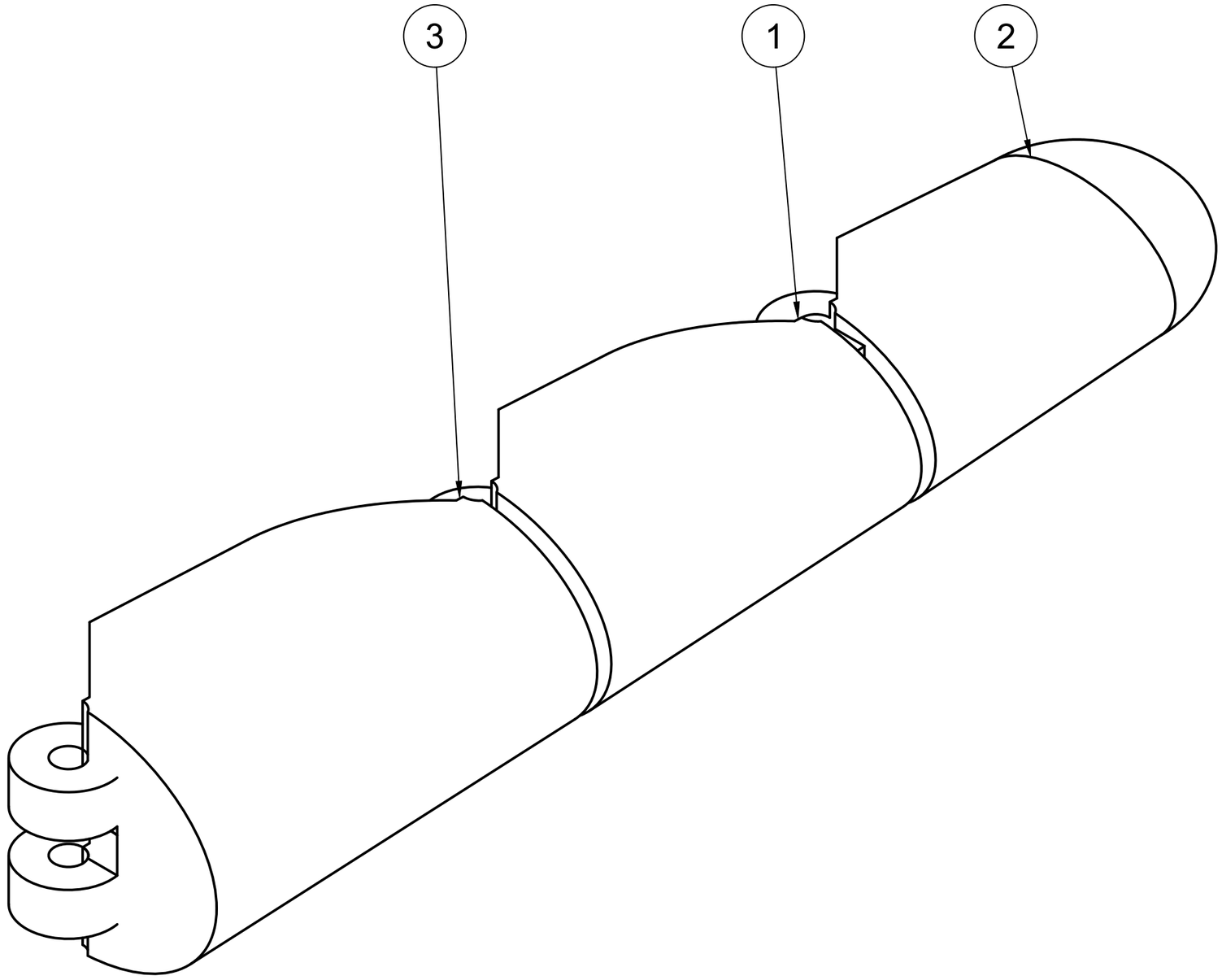

Dept.	Technical reference	Created by Ariba Naaz 14-03-2026	Approved by
		Document type	Document status
		Title index finger assembly v3	DWG No.
			Rev. / Date of issue / Sheet 1/19

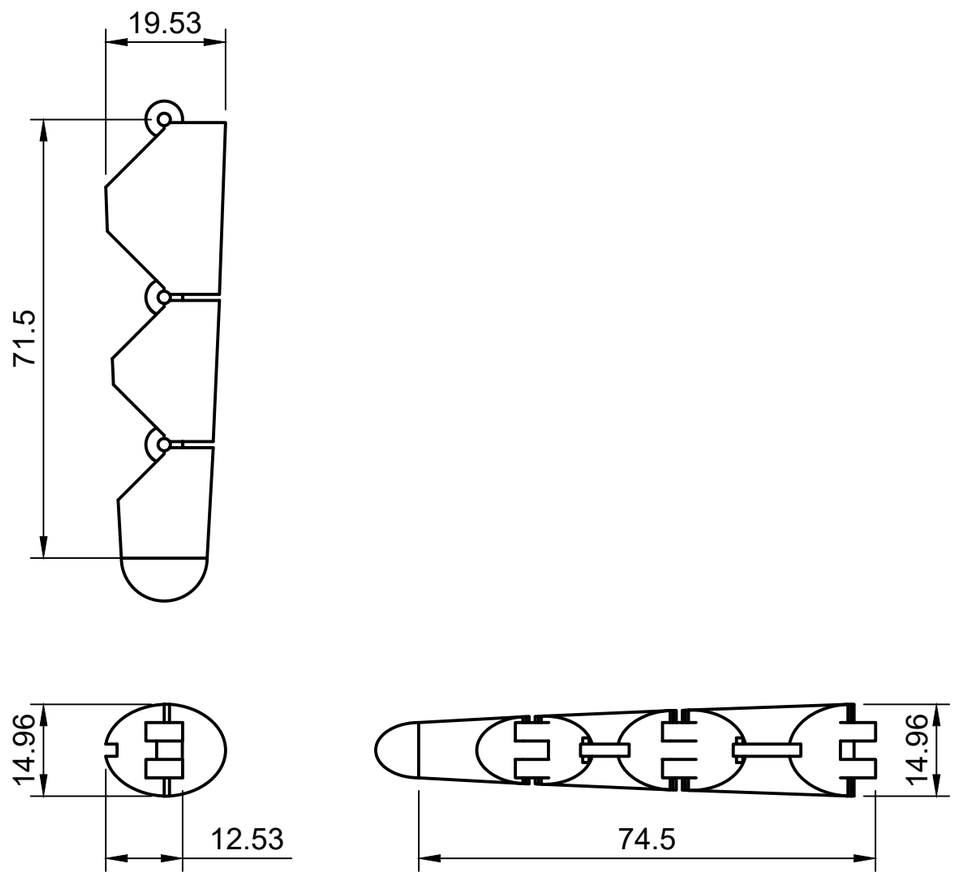

Dept.	Technical reference	Created by	Approved by
		Ariba Naaz 14-03-2026	
		Document type	Document status
		Title index finger assembly v3	DWG No.
			Rev. / Date of issue / Sheet 2/19

Parts List			
Item	Qty	Part Number	Material
1	1	Index part 1	Steel
2	1	Uppr wheel	----
3	1	Lower wheel 1	----
4	1	Lower wheel 2	----

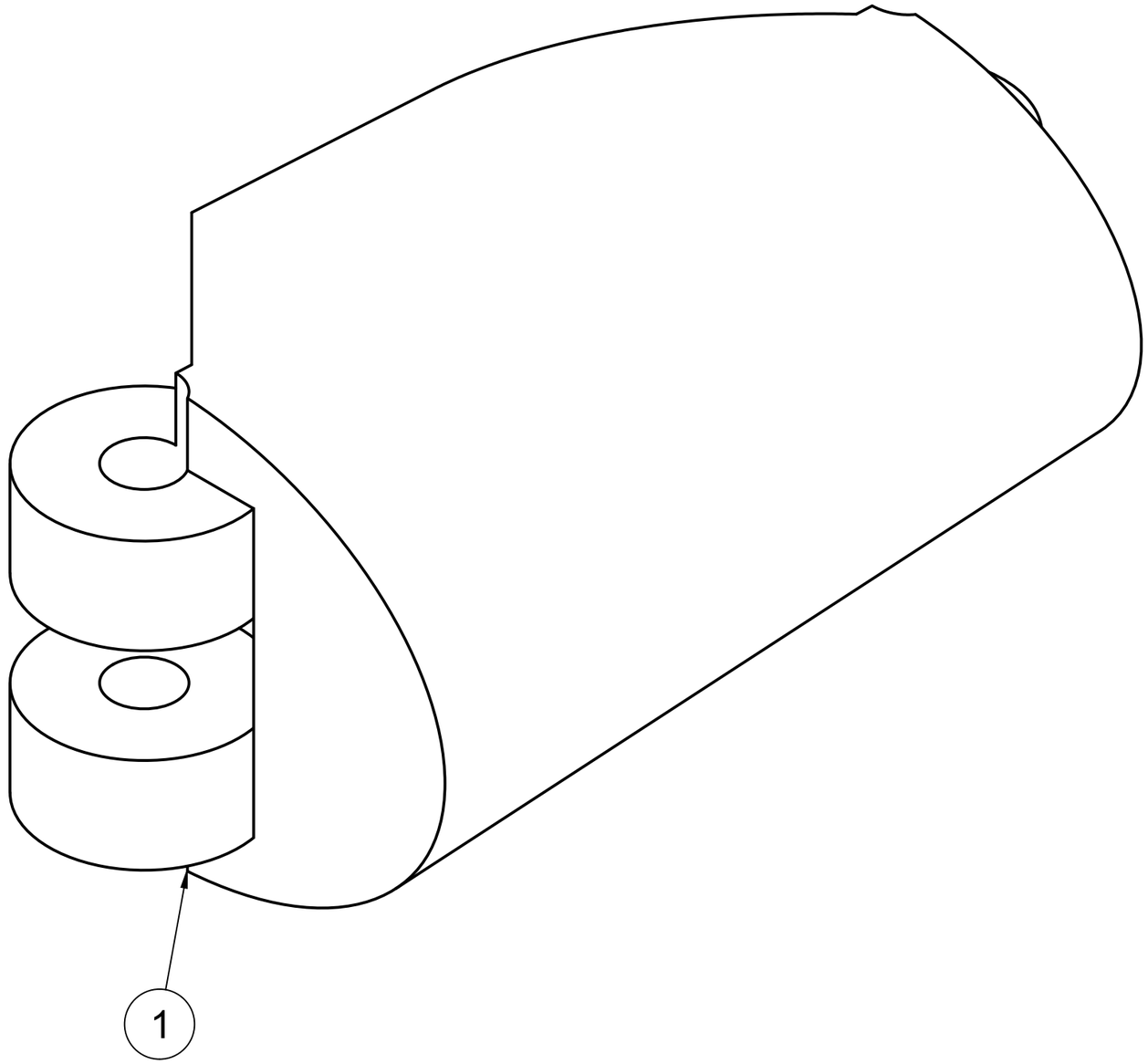

Dept.	Technical reference	Created by Ariba Naaz 14-03-2026	Approved by
		Document type	Document status
		Title index finger assembly v3	DWG No.
			Rev. / Date of issue / Sheet 3/19

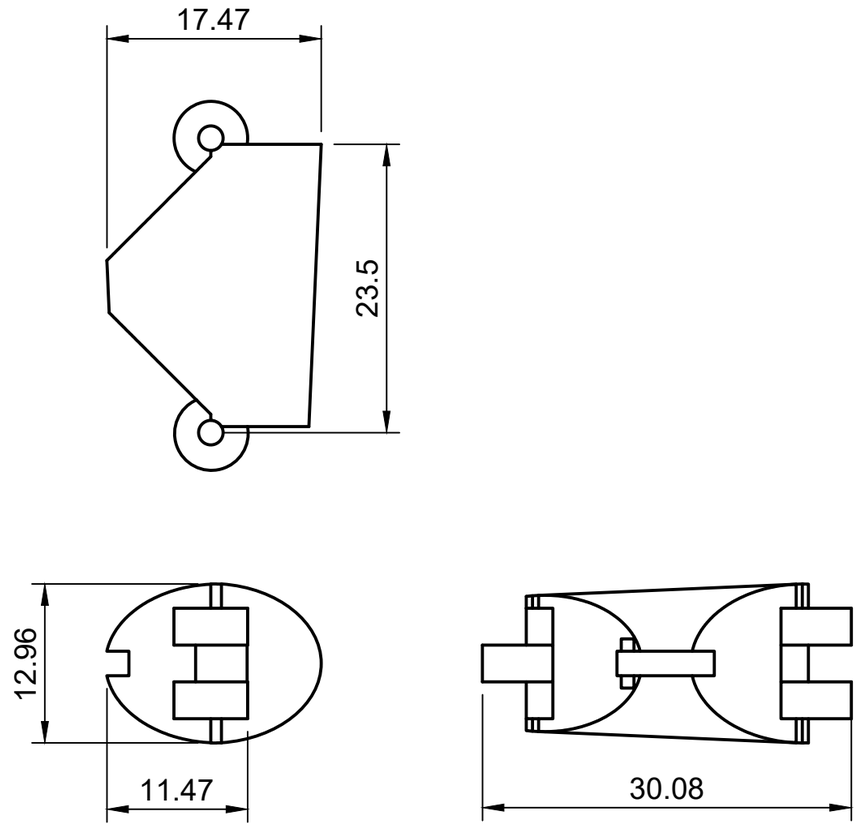

Dept.	Technical reference	Created by	Approved by
		Ariba Naaz 14-03-2026	
		Document type	Document status
		Title index finger assembly v3	DWG No.
			Rev. / Date of issue / Sheet 4/19

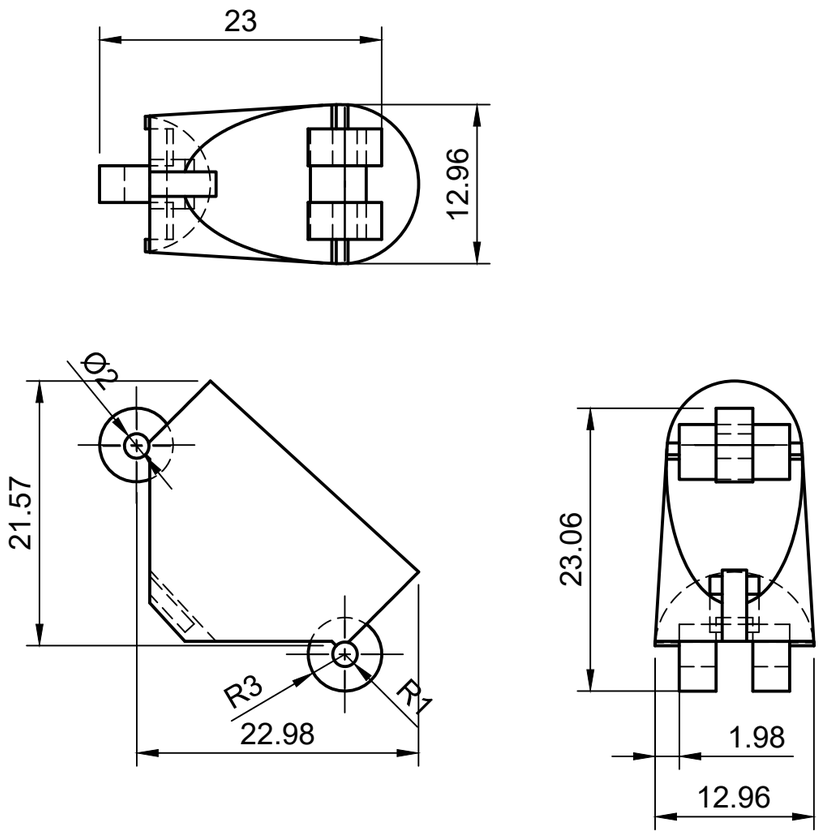

Dept.	Technical reference	Created by	Approved by
		Ariba Naaz 14-03-2026	
		Document type	Document status
		Title index finger assembly v3	DWG No.
			Rev. / Date of issue / Sheet 5/19

Dept.	Technical reference	Created by	Approved by
		Ariba Naaz 14-03-2026	
		Document type	Document status
		Title index finger assembly v3	DWG No.
			Rev. / Date of issue / Sheet 6/19

Dept.	Technical reference	Created by	Approved by
		Ariba Naaz 14-03-2026	
		Document type	Document status
		Title index finger assembly v3	DWG No.
			Rev. / Date of issue / Sheet 7/19

Dept.	Technical reference	Created by	Approved by
		Ariba Naaz 14-03-2026	
		Document type	Document status
		Title index finger assembly v3	DWG No.
			Rev. / Date of issue / Sheet 8/19

Parts List			
Item	Qty	Part Number	Material
1	1	Index part 1 (1)	Steel
2	1	Lower wheel 1 (1)	----
3	1	Lower wheel 2 (1)	----

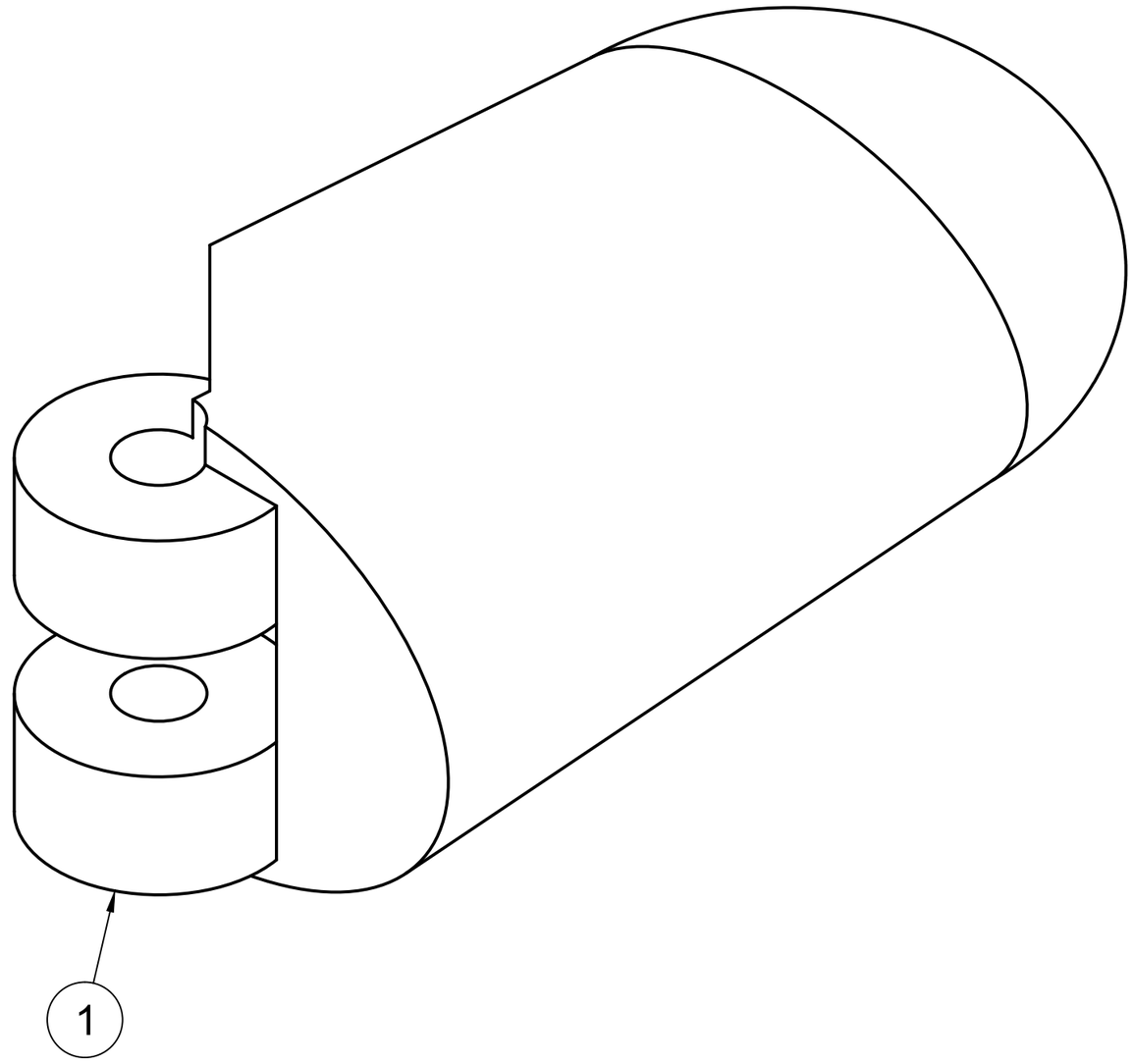

Dept.	Technical reference	Created by Ariba Naaz 14-03-2026	Approved by
		Document type	Document status
		Title index finger assembly v3	DWG No.
			Rev. / Date of issue / Sheet 9/19

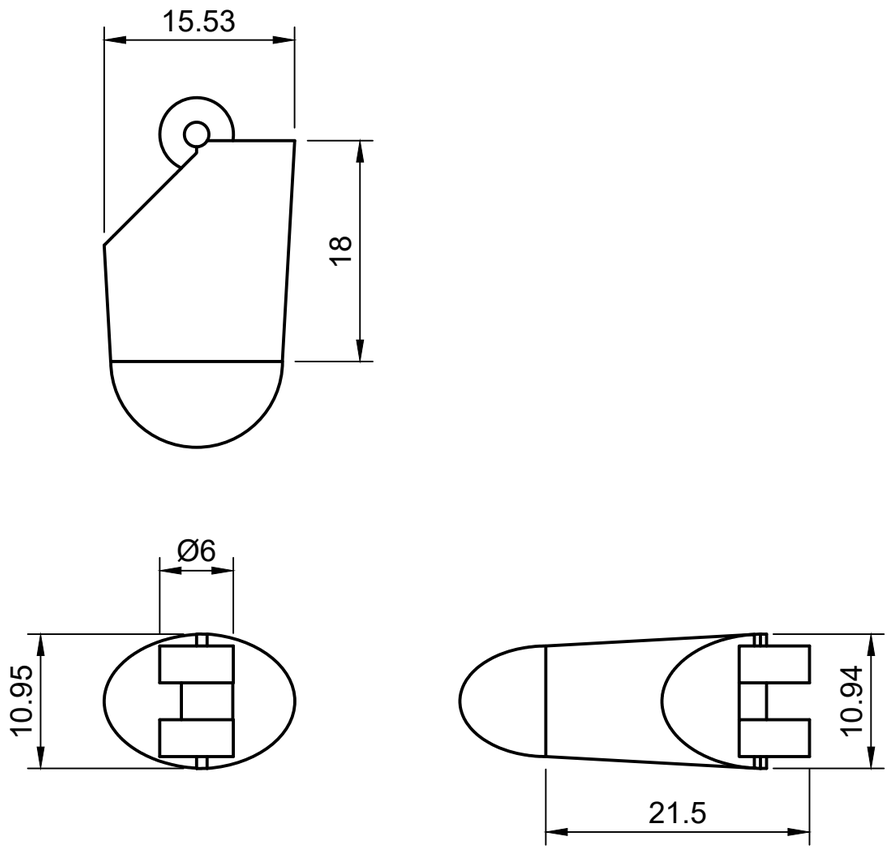

Dept.	Technical reference	Created by	Approved by
		Ariba Naaz 14-03-2026	
		Document type	Document status
		Title index finger assembly v3	DWG No.
			Rev. / Date of issue / Sheet 10/19

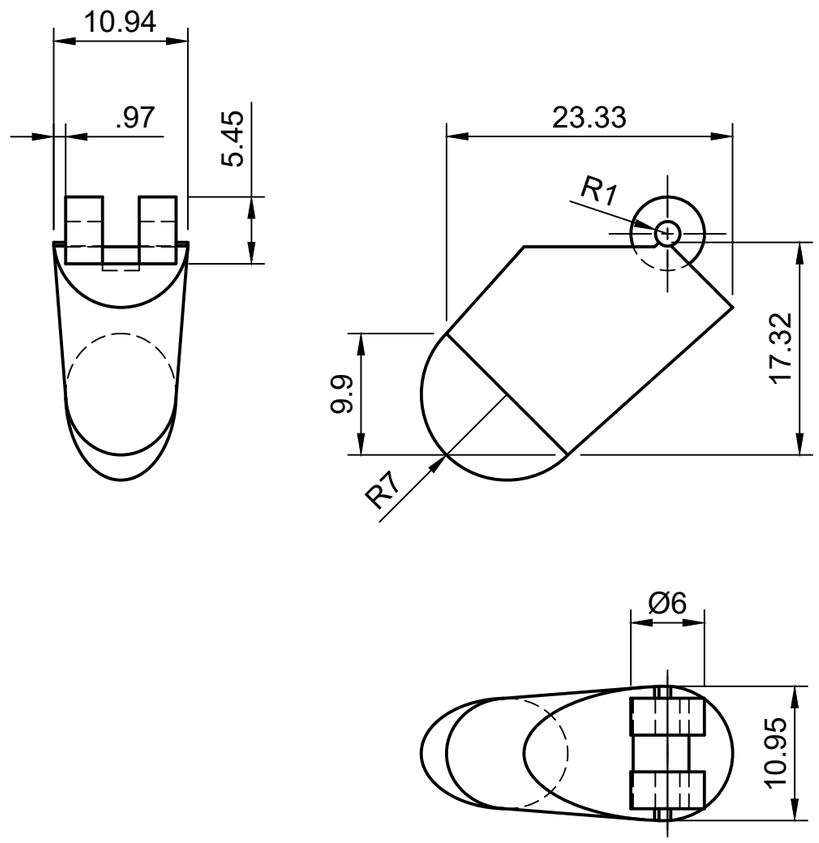

Dept.	Technical reference	Created by	Approved by
		Ariba Naaz 14-03-2026	
		Document type	Document status
		Title: index finger assembly v3	DWG No.
			Rev. / Date of issue / Sheet 11/19

Dept.	Technical reference	Created by	Approved by
		Ariba Naaz 14-03-2026	
		Document type	Document status
		Title index finger assembly v3	DWG No.
			Rev. / Date of issue / Sheet 12/19

Dept.	Technical reference	Created by	Approved by
		Ariba Naaz 14-03-2026	
		Document type	Document status
		Title index finger assembly v3	DWG No.
			Rev. / Date of issue / Sheet 13/19

Parts List			
Item	Qty	Part Number	Material
1	1	Index part 1 (2)	Steel
2	1	Uppr wheel (1)	Steel
3	1	Lower wheel 1 (2)	Steel
4	1	Lower wheel 2 (2)	Steel

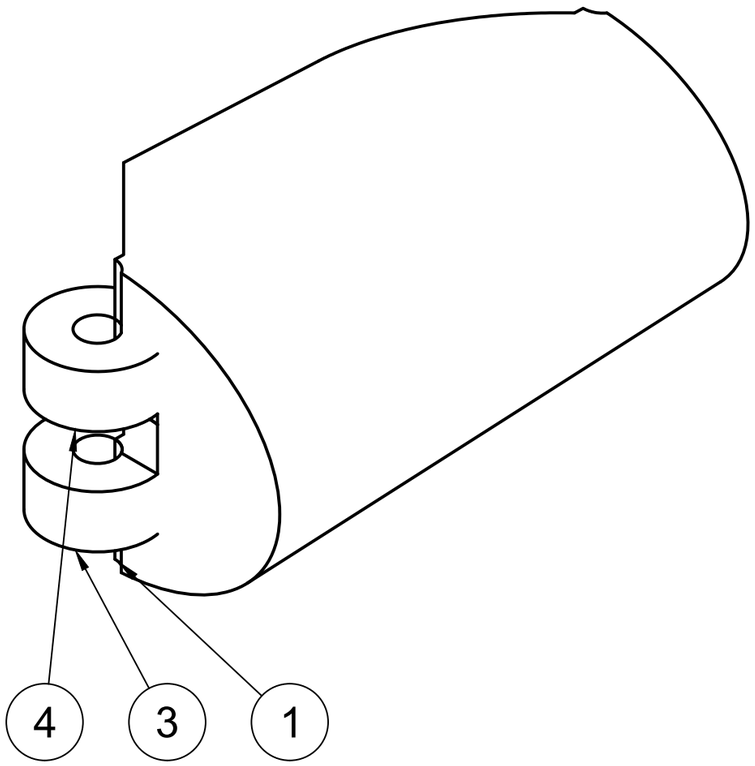

Dept.	Technical reference	Created by Ariba Naaz 14-03-2026	Approved by
		Document type	Document status
		Title index finger assembly v3	DWG No.
			Rev. / Date of issue / Sheet 14/19

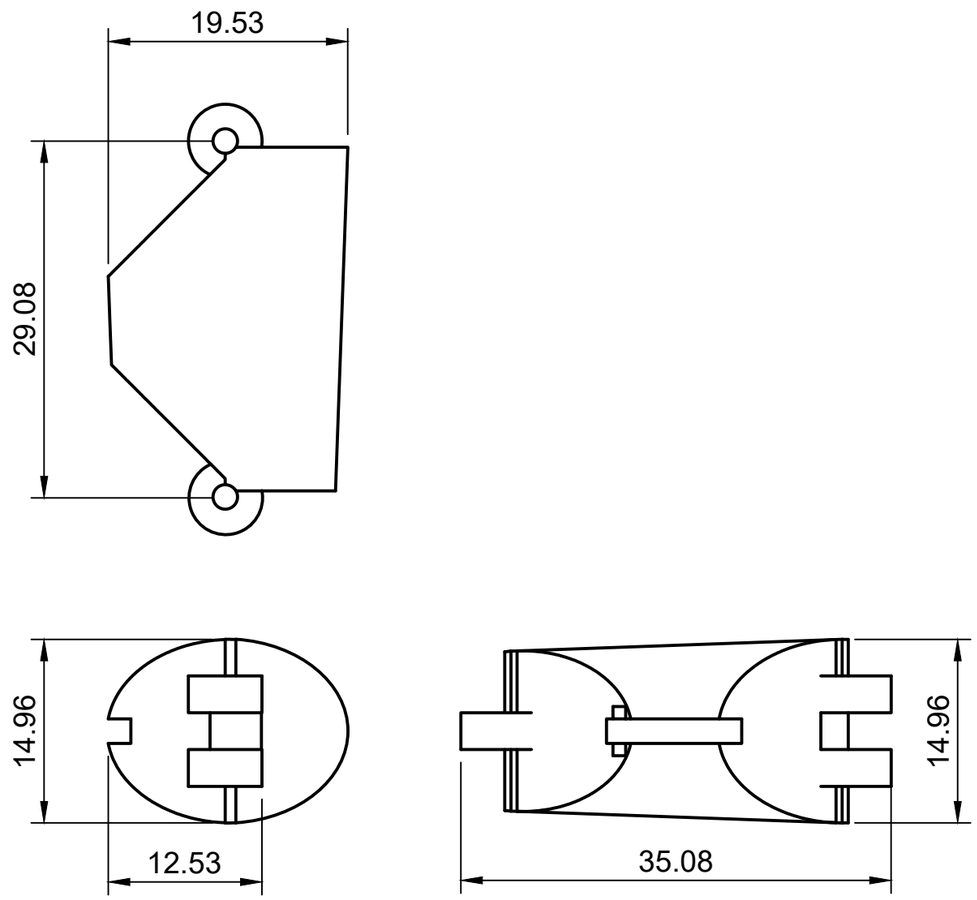

Dept.	Technical reference	Created by	Approved by
		Ariba Naaz 14-03-2026	
		Document type	Document status
		Title index finger assembly v3	DWG No.
			Rev. / Date of issue / Sheet 15/19

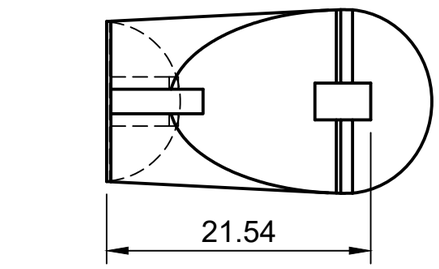

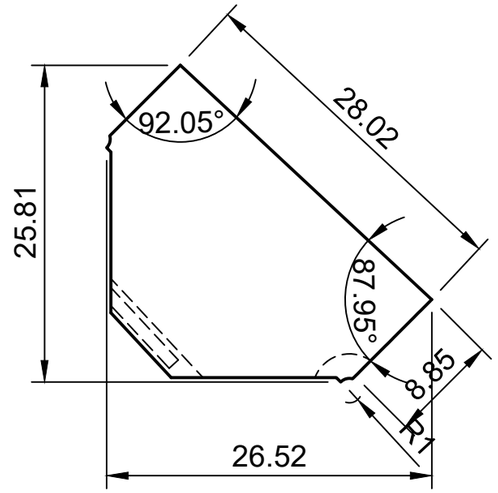

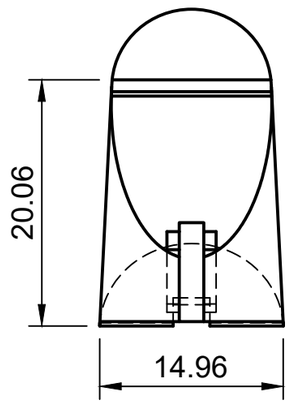

Dept.	Technical reference	Created by	Approved by
		Ariba Naaz 14-03-2026	
		Document type	Document status
		Title index finger assembly v3	DWG No.
			Rev. / Date of issue / Sheet 16/19

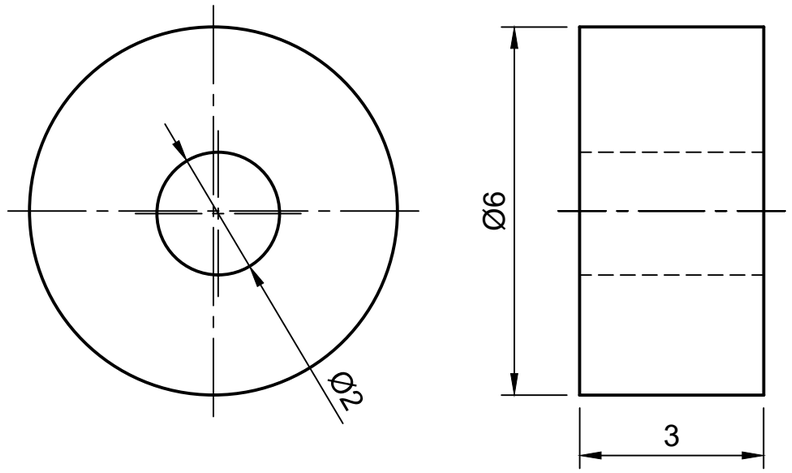

Dept.	Technical reference	Created by	Approved by
		Ariba Naaz 14-03-2026	
		Document type	Document status
		Title index finger assembly v3	DWG No.
			Rev. / Date of issue / Sheet 17/19

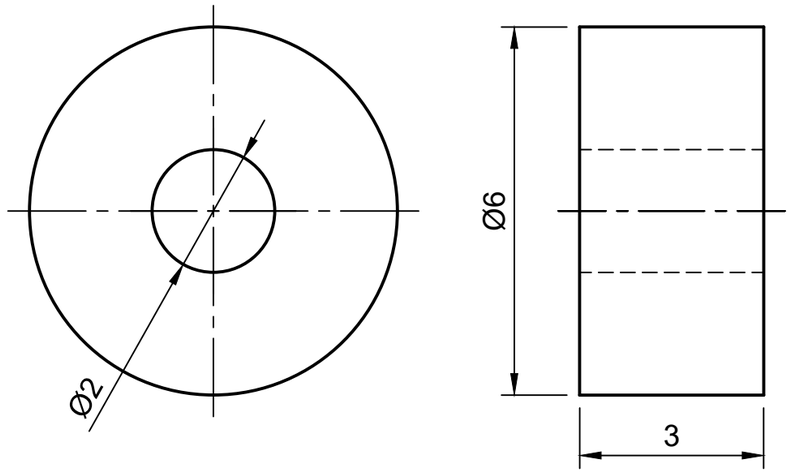

Dept.	Technical reference	Created by	Approved by
		Ariba Naaz 14-03-2026	
		Document type	Document status
		Title index finger assembly v3	DWG No.
			Rev. / Date of issue / Sheet 18/19

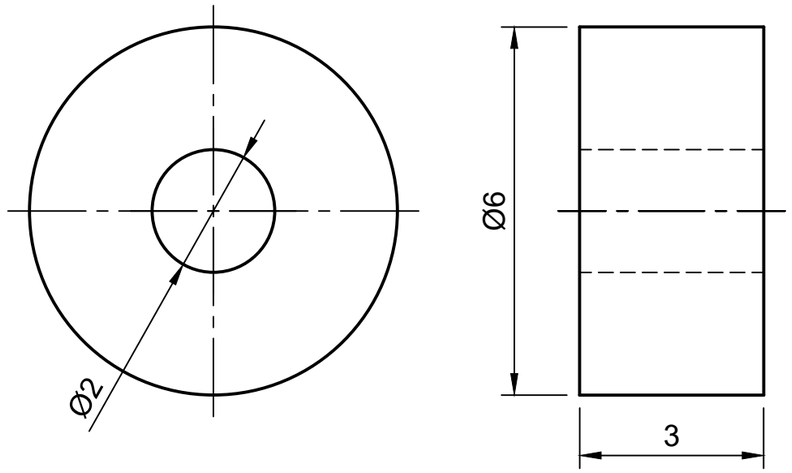

Dept.	Technical reference	Created by	Approved by
		Ariba Naaz 14-03-2026	
		Document type	Document status
		Title index finger assembly v3	DWG No.
			Rev. / Date of issue / Sheet 19/19